Centrifugal Pump

# Emporia CP

## Installation/Operating Manual

## Legal information/Copyright

Installation/Operating Manual Emporia CP

Original operating manual



Subject to technical modification without prior notice.

# Contents

# Glossary

**Certificate of decontamination**

A certificate of decontamination is enclosed by the customer when returning the product to the manufacturer to certify that the product has been properly drained to eliminate any environmental and health hazards arising from components in contact with the fluid handled.

**Close-coupled design**

Motor directly fitted to the pump via a flange or a drive lantern

**Discharge line**

The pipeline which is connected to the discharge nozzle

**Pump**

Machine without drive, additional components or accessories

**Pump set**

Complete pump set consisting of pump, drive, additional components and accessories

**Suction lift line/suction head line**

The pipeline which is connected to the suction nozzle

# 1 General

## 1.1 Principles

This operating manual is supplied as an integral part of the type series and variants indicated on the front cover. The operating manual describes the proper and safe use of this equipment in all phases of operation.

The name plate indicates the type series and size, the main operating data, the order number and the order item number. The order number and order item number uniquely identify the pump (set) and serve as identification for all further business processes.

In the event of damage, immediately contact your nearest KSB service centre to maintain the right to claim under warranty.

Noise characteristics see (⇨ Section 4.7, Page 15)

## 1.2 Installation of partly completed machinery

To install partly completed machinery supplied by KSB refer to the sub-sections under Servicing/Maintenance.

## 1.3 Target group

This operating manual is aimed at the target group of trained and qualified specialist technical personnel. (⇨ Section 2.4, Page 8)

## 1.4 Other applicable documents

**Table 1:** Overview of other applicable documents

| Document | Contents |
|---|---|
| Data sheet | Description of the technical data of the pump (set) |
| General arrangement drawing/ outline drawing | Description of mating dimensions and installation dimensions for the pump (set), weights |
| Hydraulic characteristic curve | Characteristic curves showing head, NPSH required, efficiency and power input |
| General assembly drawing[1)] | Sectional drawing of the pump |
| Spare parts lists[1)] | Description of spare parts |
| List of components[1)] | Description of all pump components |

For accessories and/or integrated machinery components, observe the relevant manufacturer's product literature.

## 1.5 Symbols

**Table 2:** Symbols used in this manual

| Symbol | Description |
|---|---|
| ✓ | Conditions which need to be fulfilled before proceeding with the step-by-step instructions |
| ▷ | Safety instructions |
| ⇨ | Result of an action |
| ⇨ | Cross-references |
| 1.<br>2. | Step-by-step instructions |
|  | Note<br>Recommendations and important information on how to handle the product |

1) If agreed to be included in the scope of supply

# 2 Safety

DANGER

**All the information contained in this section refers to hazardous situations.**

## 2.1 Key to safety symbols/markings

**Table 3:** Definition of safety symbols/markings

| Symbol | Description |
|---|---|
| DANGER | **DANGER**<br>This signal word indicates a high-risk hazard which, if not avoided, will result in death or serious injury. |
| WARNING | **WARNING**<br>This signal word indicates a medium-risk hazard which, if not avoided, could result in death or serious injury. |
| CAUTION | **CAUTION**<br>This signal word indicates a hazard which, if not avoided, could result in damage to the machine and its functions. |
|  | **General hazard**<br>In conjunction with one of the signal words this symbol indicates a hazard which will or could result in death or serious injury. |
|  | **Electrical hazard**<br>In conjunction with one of the signal words this symbol indicates a hazard involving electrical voltage and identifies information about protection against electrical voltage. |
|  | **Machine damage**<br>In conjunction with the signal word CAUTION this symbol indicates a hazard for the machine and its functions. |

## 2.2 General

This manual contains general installation, operating and maintenance instructions that must be observed to ensure safe pump operation and prevent personal injury and damage to property.

The safety information in all sections of this manual must be complied with.

This manual must be read and completely understood by the specialist personnel/ operators responsible prior to installation and commissioning.

The contents of this manual must be available to the specialist personnel at the site at all times.

Information attached directly to the pump must always be complied with and be kept in a perfectly legible condition at all times. This applies to, for example:

- Arrow indicating the direction of rotation
- Markings for connections
- Name plate

The operator is responsible for ensuring compliance with all local regulations not taken into account in this manual.

## 2.3 Intended use

- The pump (set) must not be used in potentially explosive atmospheres.
- The pump (set) must not be operated on a frequency inverter.
- The pump (set) must only be operated within the operating limits described in the other applicable documents.
- Only operate pumps/pump sets which are in perfect technical condition.
- Do not operate the pump (set) in partially assembled condition.
- Only use the pump to handle the fluids described in the data sheet or product literature of the pump model or variant.
- Never operate the pump without the fluid to be handled.
- Observe the minimum flow rates indicated in the data sheet or product literature (to prevent overheating, bearing damage, etc).
- Observe the maximum flow rates indicated in the data sheet or product literature (to prevent overheating, mechanical seal damage, cavitation damage, bearing damage, etc).
- Do not throttle the flow rate on the suction side of the pump (to prevent cavitation damage).
- Consult the manufacturer about any use or mode of operation not described in the data sheet or product literature.

**Prevention of foreseeable misuse**

- Observe all safety information and instructions in this manual.
- Never open the discharge-side shut-off elements further than permitted.
  - The maximum flow rates specified in the product literature or data sheet would be exceeded.
  - Risk of cavitation damage
- Never exceed the permissible operating limits specified in the data sheet or product literature regarding pressure, temperature, etc.

## 2.4 Personnel qualification and training

All personnel involved must be fully qualified to transport, install, operate, maintain and inspect the machinery this manual refers to.

The responsibilities, competence and supervision of all personnel involved in transport, installation, operation, maintenance and inspection must be clearly defined by the operator.

Deficits in knowledge must be rectified by means of training and instruction provided by sufficiently trained specialist personnel. If required, the operator can commission the manufacturer/supplier to train the personnel.

Training on the pump (set) must always be supervised by technical specialist personnel.

## 2.5 Consequences and risks caused by non-compliance with this manual

- Non-compliance with this operating manual will lead to forfeiture of warranty cover and of any and all rights to claims for damages.
- Non-compliance can, for example, have the following consequences:
  - Hazards to persons due to electrical, thermal, mechanical and chemical effects and explosions
  - Failure of important product functions
  - Failure of prescribed maintenance and servicing practices
  - Hazard to the environment due to leakage of hazardous substances

## 2.6 Safety awareness

In addition to the safety information contained in this manual and the intended use, the following safety regulations shall be complied with:

- Accident prevention, health and safety regulations
- Explosion protection regulations
- Safety regulations for handling hazardous substances
- Applicable standards, directives and laws

## 2.7 Safety information for the operator/user

- The operator shall fit contact guards for hot, cold and moving parts and check that the guards function properly.
- Do not remove any contact guards during operation.
- Provide the personnel with protective equipment and make sure it is used.
- Contain leakages (e.g. at the shaft seal) of hazardous fluids handled (e.g. explosive, toxic, hot) so as to avoid any danger to persons and the environment. Adhere to all relevant laws.
- Eliminate all electrical hazards. (In this respect refer to the applicable national safety regulations and/or regulations issued by the local energy supply companies.)
- If shutting down the pump does not increase potential risk, fit an emergency-stop control device in the immediate vicinity of the pump (set) during pump set installation.

## 2.8 Safety information for maintenance, inspection and installation

- Modifications or alterations of the pump are only permitted with the manufacturer's prior consent.
- Use only original spare parts or parts authorised by the manufacturer. The use of other parts can invalidate any liability of the manufacturer for resulting damage.
- The operator ensures that maintenance, inspection and installation is performed by authorised, qualified specialist personnel who are thoroughly familiar with the manual.
- Only carry out work on the pump (set) during standstill of the pump.
- Any work on the pump set shall only be performed when it has been disconnected from the power supply (de-energised).
- The pump casing must have cooled down to ambient temperature.
- Pump pressure must have been released and the pump must have been drained.
- When taking the pump set out of service always adhere to the procedure described in the manual.
- Decontaminate pumps which handle fluids posing a health hazard.
- As soon as the work has been completed, re-install and/or re-activate any safety-relevant and protective devices. Before returning the product to service, observe all instructions on commissioning. (⇨ Section 6.1, Page 21)

## 2.9 Unauthorised modes of operation

Never operate the pump (set) outside the limits stated in the data sheet and in this manual.

The warranty relating to the operating reliability and safety of the supplied pump (set) is only valid if the equipment is used in accordance with its intended use.

# 3 Transport/Temporary Storage/Disposal

## 3.1 Checking the condition upon delivery

1. On transfer of goods, check each packaging unit for damage.
2. In the event of in-transit damage, assess the exact damage, document it and notify KSB or the supplying dealer (as applicable) and the insurer about the damage in writing immediately.

## 3.2 Transport

**DANGER**

**The pump (set) could slip out of the suspension arrangement**

Danger to life from falling parts!

- Always transport the pump (set) in the specified position.
- Never attach the suspension arrangement to the free shaft end or the motor eyebolt.
- Give due attention to the weight data and the centre of gravity.
- Observe the applicable local health and safety regulations.
- Use suitable, permitted lifting accessories, e.g. self-tightening lifting tongs.

**CAUTION**

**Improper pump transport**

Damage to the pump!

- Never suspend the pump/pump set from the power cable.
- Prevent the pump (set) from getting knocked or dropped.

To transport the pump/pump set suspend it from the lifting tackle as shown.

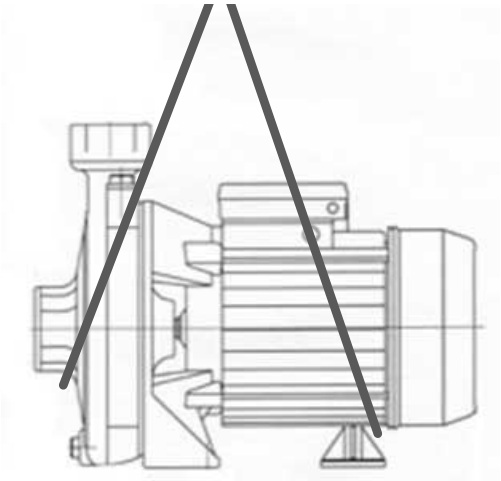

**Fig. 1:** Transporting the pump set

## 3.3 Storage/preservation

**The pump set remains installed**

1. Properly shut down the pump set.

**CAUTION**

**Damage during storage by frost, humidity, dirt, UV radiation or vermin**

Corrosion/contamination of the pump!

- ▹ Store the pump (set) in a dry, dark, frost-proof room not exposed to sunlight where the atmospheric humidity is as constant as possible.

2. Properly cover the pump set.

**The pump set is removed from the system**

1. Properly shut down the pump set.
2. Remove the suction line and discharge line from the pump.

**⚠ WARNING**

**Fluids posing a health hazard**

Hazard to persons and the environment!

- ▹ Collect and properly dispose of flushing liquid and any residues of the fluid handled.
- ▹ Wear safety clothing and a protective mask, if required.
- ▹ Observe all legal regulations on the disposal of substances posing a health hazard.

3. Drain the pump as per operating instructions.
4. Store the pump (set) in a dry, dark, frost-proof room not exposed to sunlight where the atmospheric humidity is as constant as possible.

## 3.4 Return to supplier

1. Drain the pump as per operating instructions.
2. Always flush and clean the pump, particularly if it has been used for handling noxious, explosive, hot or other hazardous fluids.
3. If the pump set has handled fluids whose residues could lead to corrosion damage in the presence of atmospheric humidity or could ignite upon contact with oxygen, the pump set must also be neutralised, and anhydrous inert gas must be blown through the pump to ensure drying.
4. Always complete and enclose a certificate of decontamination when returning the pump (set).
   Always indicate any safety and decontamination measures taken.
   (⇨ Section 12, Page 37)

**NOTE**

If required, a blank certificate of decontamination can be downloaded from the following web site: www.ksb.com/certificate_of_decontamination

### 3.5 Disposal

| | |
|---|---|
|  | **⚠ WARNING**<br>**Fluids, consumables and supplies which are hot and/or pose a health hazard**<br>Hazard to persons and the environment!<br>▹ Collect and properly dispose of flushing fluid and any residues of the fluid handled.<br>▹ Wear safety clothing and a protective mask if required.<br>▹ Observe all legal regulations on the disposal of fluids posing a health hazard. |

1. Dismantle the pump (set).
   Collect greases and other lubricants during dismantling.
2. Separate and sort the pump materials, e.g. by:
   - Metals
   - Plastics
   - Electronic waste
   - Greases and other lubricants
3. Dispose of materials in accordance with local regulations or in another controlled manner.

# 4 Description of the Pump (Set)

## 4.1 General description

- Centrifugal pump

Pump for handling clean to turbid water not containing aggressive, abrasive or solid substances.

## 4.2 Product Information as per Regulation No. 547/2012 (for water pumps with a maximum shaft power of 150 kW) implementing "Ecodesign" Directive 2009/125/EC

- Minimum efficiency index: see name plate, key to name plate
- The benchmark for the most efficient water pumps is MEI ≥ 0.70.
- Year of construction: see name plate, key to name plate
- Manufacturer's name or trade mark, commercial registration number and place of manufacture: see data sheet or order documentation
- Product's type and size identificator: see name plate, key to name plate
- Hydraulic pump efficiency (%) with trimmed impeller: see data sheet
- Pump performance curves, including efficiency characteristics: see documented characteristic curve
- The efficiency of a pump with a trimmed impeller is usually lower than that of a pump with full impeller diameter. Trimming of the impeller will adapt the pump to a fixed duty point, leading to reduced energy consumption. The minimum efficiency index (MEI) is based on the full impeller diameter.
- Operation of this water pump with variable duty points may be more efficient and economic when controlled, for example, by the use of a variable speed drive that matches the pump duty to the system.
- Information on dismantling, recycling and disposal after decommissioning: (⇨ Section 3.5, Page 12)
- Information on benchmark efficiency or benchmark efficiency graph for MEI = 0.70 (0.40) for the pump based on the model shown in the Figure are available at: http://www.europump.org/efficiencycharts

## 4.3 Designation

**Example: Emporia CP-151 M**

**Table 4:** Designation key

| Code | Description | |
|---|---|---|
| Emporia CP | Design | |
| 151 | Size | |
| M | Type of current | |
| | M | 1~230 V |
| | T2 | 3~230/400 V |

## 4.4 Name plate

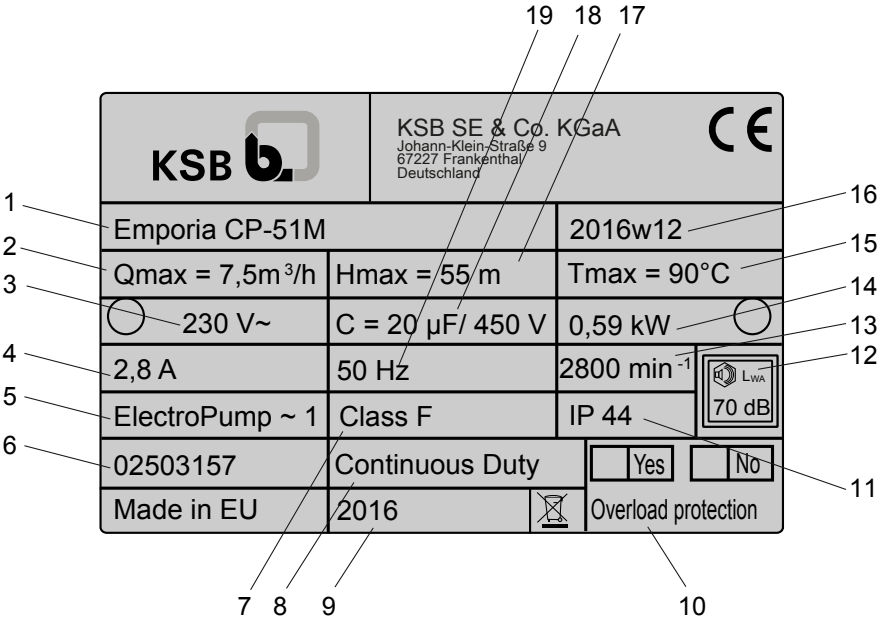


**Fig. 2:** Name plate (example)

| | | | |
|---|---|---|---|
| 1 | Type series, size | 2 | Flow rate |
| 3 | Nominal voltage | 4 | Nominal current |
| 5 | Minimum efficiency index | 6 | Material number (if applicable) |
| 7 | Thermal class | 8 | Mode of operation |
| 9 | Year of construction | 10 | External overload protection |
| 11 | Enclosure | 12 | Sound power [dB] |
| 13 | Nominal speed | 14 | Motor rating |
| 15 | Maximum fluid temperature | 16 | Series code |
| 17 | Maximum head | 18 | Run capacitor |
| 19 | Nominal frequency | - | - |

## 4.5 Design details

**Design**

- Close-coupled design
- Single-stage

**Drive**

- 1~230 VAC, 50 Hz
- Thermal overload protection
- 3~400 VAC, 50 Hz
- Thermal class F
- IP44 enclosure

**Impeller type**

- Closed radial impeller

**Bearings**

- Deep groove ball bearings
- Grease-lubricated for life

**Shaft seal**

- Mechanical seal

## 4.6 Configuration and function

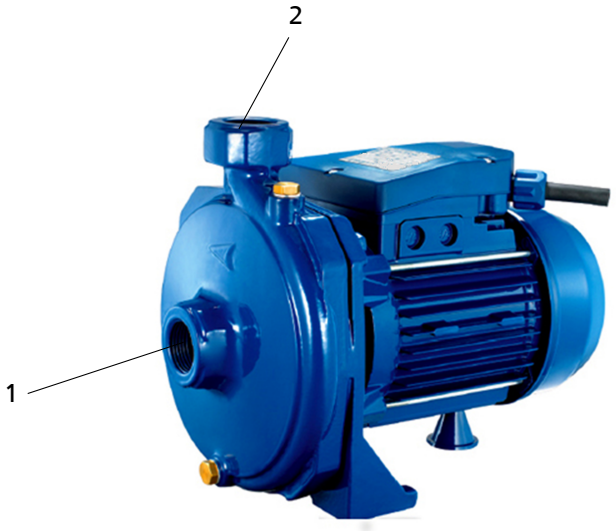


**Fig. 3:** Emporia CP

| | | | |
|---|---|---|---|
| 1 | Suction nozzle | 2 | Discharge nozzle |

**Design** Single-stage, non-self-priming centrifugal pump in close-coupled design with axial fluid inlet and vertical fluid outlet. The hydraulic system runs in common bearings and is connected to the motor via a shaft.

**Function** The fluid enters the pump via the suction nozzle (1) and is accelerated outward by the rotating impeller. In the flow passage of the pump casing the kinetic energy of the fluid is converted into pressure energy. The fluid is pumped to the discharge nozzle (2), where it leaves the pump. The shaft passage is sealed by a shaft seal. The shaft runs in rolling element bearings.

**Sealing** The pump is sealed by a standardised mechanical seal. A thrower protects the bearing and the motor in the event of leakage.

## 4.7 Noise characteristics

Sound pressure level < 70 dB(A)

## 4.8 Scope of supply

Depending on the model, the following items are included in the scope of supply:

- Pump
- Drive

## 4.9 Dimensions and weights

**Dimensions** For dimensions refer to the outline drawings of the pump.

**Weights** **Table 5:** Weights

| Size | Weight [kg] |
|---|---|
| CP-101M | 14 |
| CP-101T2 | 14 |
| CP-151M | 22,5 |
| CP-151T2 | 22,5 |
| CP-221T2 | 23 |
| CP-301T2 | 23,5 |
| CP-51M | 9 |
| CP-51T2 | 9 |

| Size | Weight [kg] |
|---|---|
| CP-81M | 12,7 |
| CP-81T2 | 12,7 |

# 5 Installation at Site

## 5.1 Checking the site before installation

### Place of installation

| | |
|---|---|
| | **⚠ WARNING**<br>**Installation on mounting surfaces which are unsecured and cannot support the load**<br>Personal injury and damage to property!<br>▹ Use a concrete of compressive strength class C12/15 which meets the requirements of exposure class X0 to EN 206-1.<br>▹ The mounting surface must have set and must be completely horizontal and even.<br>▹ Observe the weights indicated. |

1. Check the structural requirements.
   All structural work required must have been prepared in accordance with the dimensions stated in the outline drawing/general arrangement drawing.

## 5.2 Installing the pump set

| | |
|---|---|
| | **⚠ WARNING**<br>**Excessive temperatures due to improper installation**<br>Burns from touching hot surfaces!<br>Damage to the pump set!<br>▹ Install the pump set at distance of at least 30 mm from the wall in a dry, well-ventilated room that is not at risk of flooding. |

✓ The place of installation has been properly prepared.

1. Install the pump set in a horizontal position.
2. Bolt the pump set to its place of installation with the feet provided for this purpose.

## 5.3 Piping

### 5.3.1 Connecting the piping

| | |
|---|---|
| | **⚠ WARNING**<br>**Impermissible loads acting on the pump nozzles**<br>Burns from contact with fluid handled!<br>Damage to the pump set!<br>▹ Do not use the pump as an anchorage point for the piping.<br>▹ Anchor the pipes in close proximity to the pump casing.<br>▹ Observe the permissible forces and moments at the pump nozzles. |

**NOTE**

Installing check and shut-off elements in the system is recommended, depending on the type of plant and pump. However, such elements must not obstruct proper drainage or hinder disassembly of the pump.

- ✓ Suction lift lines have been laid with a rising slope, suction head lines with a downward slope towards the pump.
- ✓ A flow stabilisation section having a length equivalent to at least twice the inside diameter of the suction flange has been provided upstream of the suction flange.
- ✓ The nominal diameters of the pipes are equal to or greater than the nominal diameters of the pump nozzles.
- ✓ The pipelines have been anchored in close proximity to the pump and connected without transmitting any stresses or strains.

1. Thoroughly clean, flush and blow through all vessels, pipelines and connections (especially of new installations).
2. Before installing the pump in the piping, remove the connection covers on the suction nozzle and discharge nozzle of the pump.
3. Check that the inside of the pump is free from any foreign objects. Remove any foreign objects.
4. Connect the pump nozzles to the piping.

**CAUTION**

**Aggressive flushing and pickling agents**

Damage to the pump!

- ▹ Match the cleaning operation mode and duration for flushing and pickling service to the casing and seal materials used.

#### 5.3.2 Permissible forces and moments at the pump nozzles

No piping-induced forces and moments (from warped pipelines or thermal expansion, for example) must act on the pump.

### 5.4 Electrical connection

**DANGER**

**Electrical connection work by unqualified personnel**

Danger of death from electric shock!

- ▹ Always have the electrical connections installed by a trained and qualified electrician.
- ▹ Observe regulations IEC 60364.

**WARNING**

**Incorrect connection to the mains**

Damage to the mains network, short circuit!

- ▹ Observe the technical specifications of the local energy supply companies.

**CAUTION**

**Small parts in the motor space**

Damage to the pump set!

- ▹ Never drop small parts into the motor space.
- ▹ After the electrical connection work on the the pump set has been completed, check that no small parts have fallen into the motor space. If they have, remove them.

1. Check the available mains voltage against the data on the motor name plate.
2. Select an appropriate start-up method.

**NOTE**

A motor protection device is recommended.

**Pump sets, single-phase**

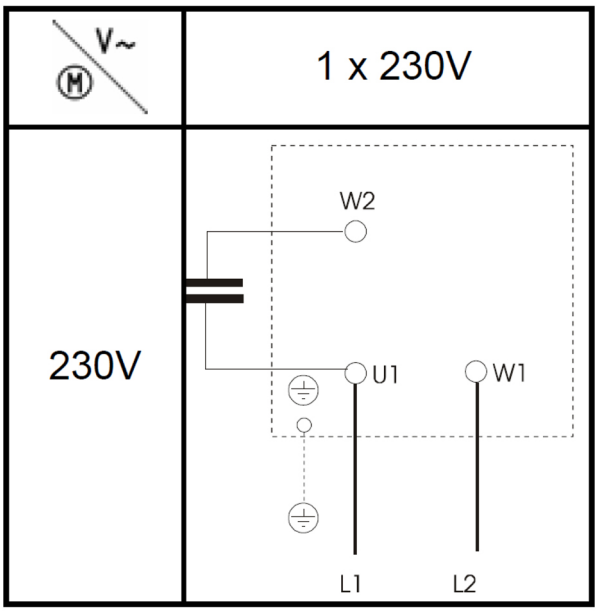


**Fig. 4:** Circuit diagram of single-phase pump sets

**Pump sets, three-phase**

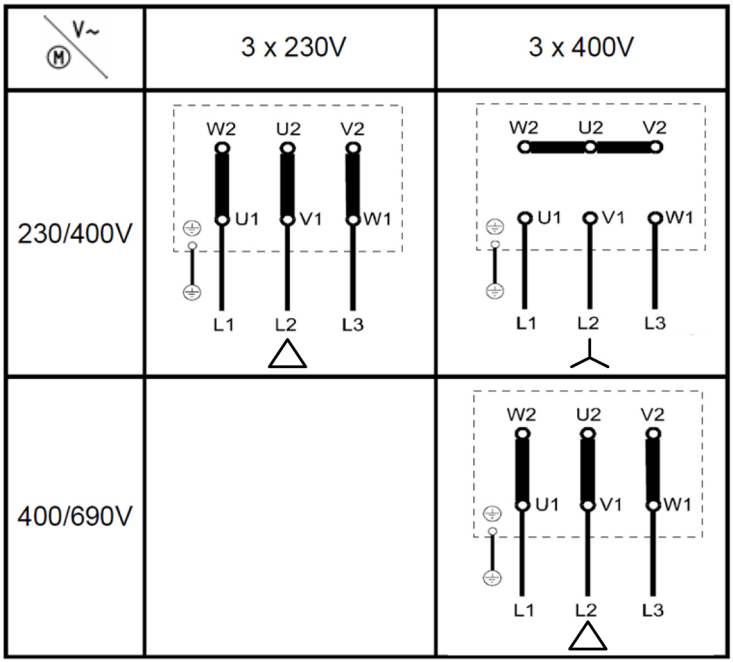


**Fig. 5:** Circuit diagram of three-phase pump sets

## 5.5 Checking the direction of rotation

| | |
|---|---|
|  | **⚠ WARNING**<br>**Temperature increase caused by rotating parts**<br>Risk of injuries! Damage to the pump set!<br>▹ Never check the direction of rotation by starting up the unfilled pump set. |
|  | **⚠ WARNING**<br>**Hands inside the pump casing**<br>Risk of injuries, damage to the pump!<br>▹ Always disconnect the pump set from the power supply and secure it against unintentional start-up before inserting your hands or other objects into the pump. |
|  | **CAUTION**<br>**Drive and pump running in the wrong direction of rotation**<br>Damage to the pump!<br>▹ Refer to the arrow indicating the direction of rotation on the pump.<br>▹ Check the direction of rotation. If required, check the electrical connection and correct the direction of rotation. |

The correct direction of rotation of motor and pump is clockwise (seen from the drive end).

1. Start the motor and stop it again immediately to determine the motor's direction of rotation.
2. Check the direction of rotation.
   The motor's direction of rotation must match the arrow indicating the direction of rotation on the pump.
3. If the motor is running in the wrong direction of rotation, check the electrical connection of the motor and the control system, if applicable.

# 6 Commissioning/Start-up/Shutdown

## 6.1 Commissioning/Start-up

### 6.1.1 Prerequisites for commissioning/start-up

Before commissioning/starting up the pump set, make sure that the following conditions are met:

- The pump set has been properly connected to the power supply and is equipped with all protection devices.
- The pump has been primed with the fluid to be handled. The pump has been vented.
- The direction of rotation has been checked.
- After prolonged shutdown of the pump (set), the activities required for returning the equipment to service have been carried out. (⇨ Section 6.4, Page 25)

### 6.1.2 Priming and venting the pump

**CAUTION**

**Increased wear due to dry running**

Damage to the pump set!

- ▹ Never operate the pump set without liquid fill.
- ▹ Never close the shut-off element in the suction line and/or supply line during pump operation.

1. Vent the pump and suction line and prime both with the fluid to be handled.
2. Fully open the shut-off element (if any) in the suction line.

**NOTE**

For design-inherent reasons some unfilled volume in the hydraulic system cannot be excluded after the pump has been primed for commissioning/start-up. However, once the motor is started up the pumping effect will immediately fill this volume with the fluid handled.

### 6.1.3 Start-up

**⚠ DANGER**

**Non-compliance with the permissible pressure and temperature limits if the pump is operated with the suction and discharge lines closed**

Leakage of hot or toxic fluids!

- ▹ Never operate the pump with the shut-off elements in the suction line and/or discharge line closed.
- ▹ Only start up the pump set with the discharge-side gate valve slightly or fully open.

**⚠ DANGER**

**Excessive temperatures due to dry running or excessive gas content in the fluid handled**

Damage to the pump set!

- ▹ Never operate the pump set without a liquid fill.
- ▹ Prime the pump as per operating instructions.
- ▹ Always operate the pump within the permissible operating range.

**CAUTION**

**Abnormal noises, vibrations, temperatures or leakage**

Damage to the pump!

- ▹ Switch off the pump (set) immediately.
- ▹ Eliminate the causes before returning the pump set to service.

✓ The system piping has been cleaned.

✓ The pump, suction line and inlet tank, if fitted, have been vented and primed with the fluid to be pumped.

✓ The lines for priming and venting have been closed.

1. Fully open the shut-off element in the suction head/suction lift line.
2. Close or slightly open the shut-off element in the discharge line.
3. Start up the motor.
4. Immediately after the pump has reached full rotational speed, slowly open the shut-off element in the discharge line and adjust it to comply with the duty point.

### 6.1.4 Checking the shaft seal

**Mechanical seal**

The mechanical seal only leaks slightly or invisibly (as vapour) during operation. Mechanical seals are maintenance-free.

### 6.1.5 Shutdown

**CAUTION**

**Heat build-up inside the pump**

Damage to the shaft seal!

- ▹ Depending on the type of installation, the pump set requires sufficient after-run time – with the heat source switched off – until the fluid handled has cooled down.

✓ The shut-off element in the suction line is and remains open.

1. Close the shut-off element in the discharge line.
2. Switch off the motor and make sure the pump set runs down smoothly to a standstill.

**NOTE**

If the discharge line is equipped with a check valve, the shut-off element in the discharge line may remain open, provided the site's requirements and regulations are taken into account and observed.

For prolonged shutdown periods:

1. Close the shut-off element in the suction line.

**CAUTION**

**Risk of freezing during prolonged pump shutdown periods**

Damage to the pump!

- ▹ Drain the pump and protect it against freezing.

## 6.2 Operating limits

**DANGER**

**Non-compliance with operating limits for pressure, temperature, fluid handled and speed**

Hot fluids escaping!

- Comply with the operating data indicated in the data sheet.
- Avoid prolonged operation against a closed shut-off element.
- Never operate the pump at product temperatures exceeding those specified in the data sheet or on the name plate.

### 6.2.1 Ambient temperature

**CAUTION**

**Operation outside the permissible ambient temperature**

Damage to the pump (set)!

- Observe the specified limits for permissible ambient temperatures.

Observe the following parameters and values during operation:

**Table 6:** Permissible ambient temperatures

| Permissible ambient temperature | Value |
|---|---|
| Maximum | 40 °C |
| Minimum | 1 °C |

### 6.2.2 Frequency of starts

**CAUTION**

**Excessive surface temperature of the motor**

Damage to the motor!

- Observe the frequency of starts specified in the motor manufacturer's product literature.

The frequency of starts is usually determined by the maximum temperature increase of the motor. This largely depends on the power reserves of the motor in steady-state operation and on the starting conditions (DOL, star-delta, moments of inertia, etc). If the starts are evenly spaced over the period indicated, the following limits serve as orientation for start-up with the discharge-side gate valve slightly open:

**Table 7:** Frequency of starts

| Motor rating [kW] | Maximum No. of start-ups [Start-ups/hour] |
|---|---|
| < 4 | 15 |
| > 5 | 10 |

**CAUTION**

**Re-starting while motor is still running down**

Damage to the pump (set)!

- Do not re-start the pump set before the pump rotor has come to a standstill.

### 6.2.3 Maximum operating pressure

**CAUTION**

**Permissible operating pressure exceeded**

Damage to connections and seals!

- ▹ Never exceed the operating pressure specified in the data sheet.

**Table 8:** Maximum operating pressure

| Size | Maximum permissible operating pressure [bar] |
|---|---|
| CP-51 | 6 |
| CP-81 | |
| CP-101 | |
| CP-151 | 8 |
| CP-221 | |
| CP-301 | |

### 6.2.4 Fluid handled

#### 6.2.4.1 Fluid temperature

**CAUTION**

**Incorrect temperature of the fluid handled**

Damage to the pump (set)!

- ▹ Do not operate the pump (set) outside the specified temperature limits.

Do not operate the pump at temperatures higher than 90 °C.

#### 6.2.4.2 Density of the fluid handled

The pump input power changes in proportion to the density of the fluid handled.

**CAUTION**

**Impermissibly high density of the fluid handled**

Motor overload!

- ▹ Make sure the motor has sufficient power reserves.

#### 6.2.4.3 Abrasive fluids

When the pump handles fluids containing abrasive substances, increased wear of the hydraulic system and the shaft seal are to be expected. In this case, reduce the commonly recommended inspection intervals.

## 6.3 Shutdown/storage/preservation

**DANGER**

**Electrical connection work by unqualified personnel**

Danger of death from electric shock!

- ▹ Always have the electrical connections installed by a trained and qualified electrician.
- ▹ Observe regulations IEC 60364.

**DANGER**

**Power supply not disconnected**

Danger to life!

- ▹ Pull the mains plug or disconnect all electrical connections and secure against unintentional start-up.

**The pump (set) remains installed**

✓ Sufficient fluid is supplied for the operation check run of the pump.

1. Start up the pump (set) regularly between once a month and once every three months for approximately five minutes during prolonged shutdown periods. This will prevent the formation of deposits within the pump and the pump intake area.

**The pump (set) is removed from the pipe and stored**

✓ The pump has been properly drained and the safety instructions for dismantling the pump have been observed. (⇨ Section 7.4.1, Page 28)

1. Spray-coat the inside wall of the pump casing and, in particular, the impeller clearance areas with a preservative.
2. Spray the preservative through the suction and discharge nozzles.
   It is advisable to then close the pump nozzles (e.g. with plastic caps or similar).
3. Oil or grease all exposed machined parts and surfaces of the pump (with silicone-free oil and grease, food-approved if required) to protect them against corrosion.
   Observe the additional instructions .

If the pump set is to be stored temporarily, only preserve the wetted components made of low-alloy materials. Commercially available preservatives (food-approved, if required) can be used for this purpose. Observe the manufacturer's instructions for application/removal.

Observe any additional instructions and information provided. (⇨ Section 3, Page 10)

## 6.4 Returning to service

For returning the equipment to service, observe the sections on commissioning/start-up (⇨ Section 6.1, Page 21) and the operating limits. (⇨ Section 6.2, Page 23)

In addition, carry out all servicing/maintenance operations before returning the pump (set) to service. (⇨ Section 7, Page 26)

**WARNING**

**Failure to re-install or re-activate protective devices**

Risk of personal injury from moving parts or escaping fluid!

- ▹ As soon as the work is complete, re-install and/or re-activate any safety-relevant and protective devices.

**NOTE**

If the pump has been out of service for more than one year, replace all elastomer seals.

# 7 Servicing/Maintenance

## 7.1 Safety regulations

**NOTE**

All maintenance, service and installation work can be carried out by KSB Service or authorised workshops. For contact details please refer to the enclosed "Addresses" booklet or visit "www.ksb.com/contact" on the Internet.

The operator ensures that maintenance, inspection and installation is performed by authorised, qualified specialist personnel who are thoroughly familiar with the manual.

**DANGER**

**Electrical connection work by unqualified personnel**

Danger of death from electric shock!

- Always have electrical work performed by a trained and qualified electrician only.
- Observe regulations IEC 60364 and HD 637 S1.

**WARNING**

**Unqualified personnel performing work on the pump (set)**

Risk of injury!

- Always have repair and maintenance work performed by specially trained, qualified personnel.

**DANGER**

**Insufficient preparation of work on the pump (set)**

Risk of injury!

- Properly shut down the pump set.
- Close the shut-off elements in suction and discharge line.
- Drain the pump and release the pump pressure.
- Close any auxiliary connections.
- Allow the pump set to cool down to ambient temperature.

**WARNING**

**Unintentional starting of the pump set**

Risk of injury by moving components and shock currents!

- Ensure that the pump set cannot be started unintentionally.
- Always make sure the electrical connections are disconnected before carrying out work on the pump set.

**WARNING**

**Insufficient stability**

Risk of crushing hands and feet!

- During assembly/dismantling, secure the pump (set)/pump parts to prevent tilting or tipping over.

A regular maintenance schedule will help avoid expensive repairs and contribute to trouble-free, reliable operation of the pump, pump set and pump parts with a minimum of servicing/maintenance expenditure and work.

## 7.2 Servicing/inspection

### 7.2.1 Supervision of operation

**DANGER**

**Incorrectly serviced shaft seal**

Fire hazard!

Hot fluids escaping!

Damage to the pump set!

- Regularly service the shaft seal.

**DANGER**

**Excessive temperatures as a result of bearings running hot or defective bearing seals**

Fire hazard!

Damage to the pump set!

- Regularly check the rolling element bearings for running noises.

**CAUTION**

**Increased wear due to dry running**

Damage to the pump set!

- Never operate the pump set without liquid fill.
- Never close the shut-off element in the suction line and/or supply line during pump operation.

**CAUTION**

**Impermissibly high temperature of fluid handled**

Damage to the pump!

- Prolonged operation against a closed shut-off element is not permitted (heating up of the fluid).
- Observe the temperature limits in the data sheet and in the section on operating limits. (⇨ Section 6.2, Page 23)

While the pump is in operation, observe and check the following:

- The pump must run quietly and free from vibrations at all times.
- Check the shaft seal. (⇨ Section 6.1.4, Page 22)
- Check the static sealing elements for leakage.
- Check the rolling element bearings for running noises.
  Vibrations, noise and an increase in current input occurring during unchanged operating conditions indicate wear.

**CAUTION**

**Operation outside the permissible bearing temperature**

Damage to the pump!

- The bearing temperature of the pump (set) must never exceed 90 °C (measured on the outside of the motor housing).

**NOTE**

After commissioning, increased temperatures may occur at grease-lubricated rolling element bearings due to the running-in process. The final bearing temperature is only reached after a certain period of operation (up to 48 hours depending on the conditions).

## 7.3 Drainage/cleaning

**⚠ WARNING**

**Fluids, consumables and supplies which are hot and/or pose a health hazard**

Hazard to persons and the environment!

- ▹ Collect and properly dispose of flushing fluid and any residues of the fluid handled.
- ▹ Wear safety clothing and a protective mask if required.
- ▹ Observe all legal regulations on the disposal of fluids posing a health hazard.

1. Use the suction nozzle or discharge nozzle to drain the fluid handled.
2. Always flush the system if it has been used for handling noxious, explosive, hot or other hazardous fluids.
   Always flush and clean the pump before transporting it to the workshop.
   Provide a certificate of decontamination for the pump. (⇨ Section 12, Page 37)

## 7.4 Dismantling the pump set

### 7.4.1 General information/Safety regulations

**⚠ DANGER**

**Insufficient preparation of work on the pump (set)**

Risk of injury!

- ▹ Properly shut down the pump set.
- ▹ Close the shut-off elements in suction and discharge line.
- ▹ Drain the pump and release the pump pressure.
- ▹ Close any auxiliary connections.
- ▹ Allow the pump set to cool down to ambient temperature.

**⚠ WARNING**

**Unqualified personnel performing work on the pump (set)**

Risk of injury!

- ▹ Always have repair and maintenance work performed by specially trained, qualified personnel.

**⚠ WARNING**

**Hot surface**

Risk of injury!

- ▹ Allow the pump set to cool down to ambient temperature.

**⚠ WARNING**

**Improper lifting/moving of heavy assemblies or components**

Personal injury and damage to property!

- ▹ Use suitable transport devices, lifting equipment and lifting tackle to move heavy assemblies or components.

Always observe the safety instructions and information.

For any work on the motor, observe the instructions of the relevant motor manufacturer.

For dismantling and reassembly observe the exploded views and the general assembly drawing. (⇨ Section 9.1, Page 33)

In the event of damage, you can always contact our service department.

**NOTE**

All maintenance, service and installation work can be carried out by KSB Service or authorised workshops. For contact details please refer to the enclosed "Addresses" booklet or visit "www.ksb.com/contact" on the Internet.

**NOTE**

After a prolonged period of operation the individual components may be hard to pull off the shaft. If this is the case, use a brand name penetrating agent and/or - if possible - an appropriate puller.

## 7.5 Reassembling the pump set

### 7.5.1 General information/Safety regulations

**⚠ WARNING**

**Improper lifting/moving of heavy assemblies or components**

Personal injury and damage to property!

- ▹ Use suitable transport devices, lifting equipment and lifting tackle to move heavy assemblies or components.

**CAUTION**

**Improper reassembly**

Damage to the pump!

- ▹ Reassemble the pump (set) in accordance with the general rules of sound engineering practice.
- ▹ Use original spare parts only.

**Sequence**

Always re-assemble the pump in accordance with the corresponding general assembly drawing or exploded view. (⇨ Section 9.1, Page 33)

**Sealing elements**

- O-rings
  - Check O-rings for any damage and replace by new O-rings if required.
  - Never use O-rings that have been made by cutting an O-ring cord to size and gluing the ends together.
- Assembly adhesives
  - Avoid the use of assembly adhesives if possible.

**Tightening torques**

For reassembly, tighten all screws and bolts as specified in this manual. (⇨ Section 7.6, Page 30)

## 7.6 Tightening torques

**Table 9:** Tightening torques for bolted/screwed connections

| Position | Nominal value [Nm] |
|---|---|
| Pump casing | 10 |
| Tie bolt | 15 |
| Impeller nut | 10 |

## 7.7 Spare parts stock

### 7.7.1 Ordering spare parts

Always quote the following data when ordering replacement or spare parts:

- Type series
- Size
- Order number
- Order item number
- Series code
- Year of construction

Refer to the name plate for all data.

Also specify the following data:

- Part number and description
- Quantity of spare parts
- Shipping address
- Mode of dispatch (freight, mail, express freight, air freight)

# 8 Trouble-shooting

**⚠ WARNING**

**Improper work to remedy faults**

Risk of injury!

▹ For any work performed to remedy faults, observe the relevant information given in this operating manual and/or in the product literature provided by the accessories manufacturer.

If problems occur that are not described in the following table, consultation with the KSB customer service is required.

**A** Pump delivers insufficient flow rate

**B** Motor is overloaded

**C** Leakage at the pump

**D** Excessive leakage at the shaft seal

**E** Vibrations during pump operation

**F** Impermissible temperature increase in the pump

**Table 10:** Trouble-shooting

| A | B | C | D | E | F | Possible cause | Remedy[2)] |
|---|---|---|---|---|---|---|---|
| ✗ | - | - | - | - | - | ▪ Pump delivers against an excessively high pressure. | ▪ Check system for impurities. |
| ✗ | - | - | - | ✗ | ✗ | ▪ Pump and/or piping are not completely vented and/or primed. | ▪ Vent and/or prime. |
| ✗ | - | - | - | - | - | ▪ Supply line or impeller clogged | ▪ Remove deposits in the pump and/or piping. |
| ✗ | - | - | - | - | - | ▪ Formation of air pockets in the piping | ▪ Alter piping layout.<br>▪ Fit a vent valve. |
| ✗ | - | - | - | - | - | ▪ Air intake at the shaft seal | ▪ Supply external barrier fluid and/or increase its pressure.<br>▪ Fit new shaft seal. |
| ✗ | - | - | - | - | - | ▪ Wrong direction of rotation | ▪ Check the electrical connection of the motor and the control system, if any. |
| ✗ | - | - | - | ✗ | - | ▪ Wear of internal components | ▪ Replace worn components by new ones. |
| - | ✗ | - | - | ✗ | - | ▪ Pump back pressure is lower than specified in the purchase order. | ▪ Re-adjust to duty point. |
| - | ✗ | - | - | - | - | ▪ Density or viscosity of fluid handled higher than stated in purchase order | ▪ Contact KSB. |
| - | - | ✗ | - | - | - | ▪ Tie bolts/sealing element defective | ▪ Replace sealing element at pump casing.<br>▪ Re-tighten the bolts. |
| - | - | - | ✗ | - | - | ▪ Worn shaft seal | ▪ Fit new shaft seal. |
| - | - | - | ✗ | - | - | ▪ Dismantle to find out. | ▪ Remedy.<br>▪ Fit new shaft seal, if required. |
| - | - | - | ✗ | ✗ | - | ▪ Pump is warped or sympathetic vibrations in the piping. | ▪ Check pipeline connections and secure fixing of pump; if required, reduce the distances between the pipe clamps.<br>▪ Fix the pipelines using anti-vibration material. |
| ✗ | ✗ | - | - | - | - | ▪ Motor is running on 2 phases only. | ▪ Replace the defective fuse.<br>▪ Check the electrical cable connections. |
| - | - | - | - | ✗ | - | ▪ Rotor out of balance | ▪ Clean the impeller. |
| - | - | - | - | ✗ | - | ▪ Defective bearing(s) | ▪ Replace. |

2) Pump pressure must be released before attempting to remedy faults on parts which are subjected to pressure.

| A | B | C | D | E | F | Possible cause | Remedy[2)] |
|---|---|---|---|---|---|---|---|
| ✗ | ✗ | - | - | - | ✗ | ▪ Thermal motor protection device has tripped. | ▪ Verify that mains voltage matches the voltage indicated on the name plate.<br>▪ Ensure that the motor ventilation openings are clear. |
| ✗ | - | - | - | - | - | ▪ Excessive pressure loss in the piping | ▪ Check whether piping diameter is too small or piping is clogged. |

# 9 Related Documents

## 9.1 Exploded view and list of components

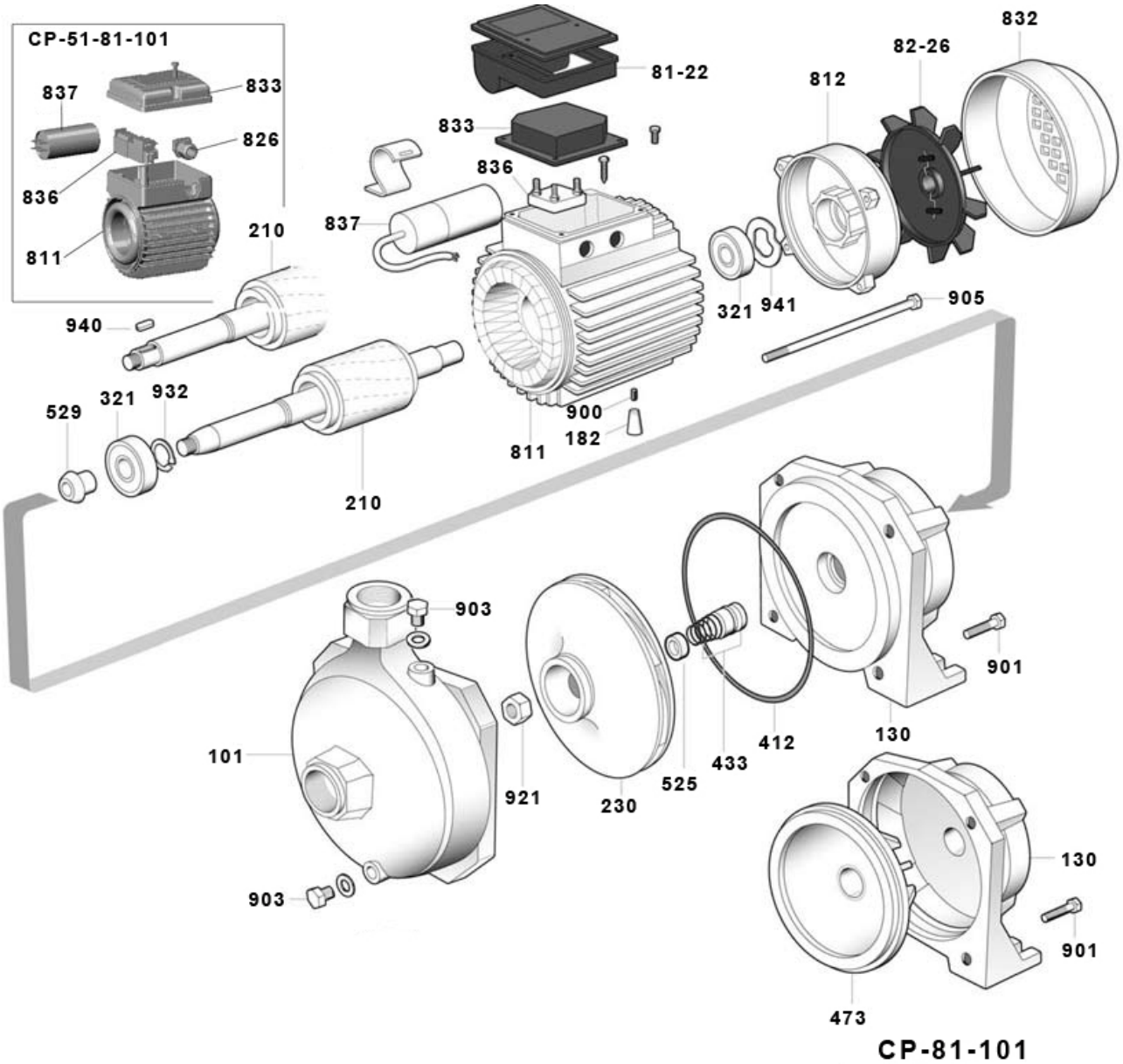


**Fig. 6:** Exploded view (size CP-51-301)

**Table 11:** List of components

| Part No. | Description |
|---|---|
| 101 | Pump casing |
| 130 | Casing part |
| 182 | Foot |
| 210 | Shaft |
| 230 | Impeller |
| 321 | Radial ball bearing |
| 412 | O-ring |
| 433 | Mechanical seal |
| 473 | Seal cover |
| 525 | Spacer sleeve |
| 529 | Bearing sleeve |

| Part No. | Description |
|---|---|
| 81-22 | Terminal box cover |
| 82-26 | Fan |
| 811 | Motor housing |
| 812 | Motor housing cover |
| 826 | Cable gland |
| 832 | Fan hood |
| 833 | Terminal box |
| 836 | Terminal strip |
| 837 | Capacitor |
| 900 | Screw |
| 901 | Hexagon head bolt |
| 903 | Screw plug |
| 905 | Tie bolt |
| 921 | Shaft nut |
| 932 | Circlip |
| 940 | Key |
| 941 | Woodruff key |

# 10 EU Declaration of Conformity

Manufacturer: **KSB SE & Co. KGaA**
**Johann-Klein-Straße 9**
**67227 Frankenthal (Germany)**

The manufacturer herewith declares that **the product**:

## Emporia CP, Emporia MB, Emporia PD (T..., 3~)

**Series code range:** 2016w39 - 2018w52

- is in conformity with the provisions of the following Directives as amended from time to time:
  - Pump (set): Machinery Directive 2006/42/EC

The manufacturer also declares that

- the following harmonised international standards have been applied:
  - ISO 12100
  - EN 809
  - EN 60034-1, EN 60034-5/A1

Person authorised to compile the technical file:

Dr. Lutz Urban
Head of Product Development Standardised Water Pumps
KSB SE & Co. KGaA
Johann-Klein-Straße 9
67227 Frankenthal (Germany)

The EU Declaration of Conformity was issued in/on:

Frankenthal, 1 February 2018

Thomas Heng

Thomas Heng
Head of Product Development Series Pumps
KSB SE & Co. KGaA
Johann-Klein-Straße 9
67227 Frankenthal

# 11 EU Declaration of Conformity

Manufacturer: **KSB SE & Co. KGaA**
**Johann-Klein-Straße 9**
**67227 Frankenthal (Germany)**

The manufacturer herewith declares that **the product**:

## Emporia CP, Emporia MB, Emporia PD (M..., 1~)

**Series code range:** 2016w39 - 2018w52

- is in conformity with the provisions of the following Directives as amended from time to time:
  - Pump (set): Machinery Directive 2006/42/EC

The manufacturer also declares that

- the following harmonised international standards have been applied:
  - ISO 12100
  - EN 809
  - EN 60034-1, EN 60034-5/A1
  - EN 60335-1/A1, EN 60335-2-41

Person authorised to compile the technical file:

Dr. Lutz Urban
Head of Product Development Standardised Water Pumps
KSB SE & Co. KGaA
Johann-Klein-Straße 9
67227 Frankenthal (Germany)

The EU Declaration of Conformity was issued in/on:

Frankenthal, 1 February 2018

Thomas Heng

Thomas Heng

Head of Product Development Series Pumps

KSB SE & Co. KGaA
Johann-Klein-Straße 9

67227 Frankenthal

# 12 Certificate of Decontamination

Type: .....

Order number/

Order item number[3]: .....

Delivery date: .....

Field of application: .....

Fluid handled[3]: .....

Please tick where applicable[3]:

☐ Radioactive

☐ Explosive

☐ Corrosive

☐ Toxic

☐ Harmful

☐ Bio-hazardous

☐ Highly flammable


☐ Safe

Reason for return[3]: .....

Comments: .....

.....

The product/accessories have been carefully drained, cleaned and decontaminated inside and outside prior to dispatch/ placing at your disposal.

We herewith declare that this product is free from hazardous chemicals, biological and radioactive substances.

For mag-drive pumps, the inner rotor unit (impeller, casing cover, bearing ring carrier, plain bearing, inner rotor) has been removed from the pump and cleaned. In cases of containment shroud leakage, the outer rotor, bearing bracket lantern, leakage barrier and bearing bracket or intermediate piece have also been cleaned.

For canned motor pumps, the rotor and plain bearing have been removed from the pump for cleaning. In cases of leakage at the stator can, the stator space has been examined for fluid leakage; if fluid handled has penetrated the stator space, it has been removed.

☐ No special safety precautions are required for further handling.

☐ The following safety precautions are required for flushing fluids, fluid residues and disposal:

.....

.....

We confirm that the above data and information are correct and complete and that dispatch is effected in accordance with the relevant legal provisions.

| ..... | ..... | ..... |
|---|---|---|
| Place, date and signature | Address | Company stamp |

3) Required fields

# Index

5132.83/02-EN

**KSB SE & Co. KGaA**
Johann-Klein-Straße 9 • 67227 Frankenthal (Germany)
Tel. +49 6233 86-0
www.ksb.com